SAMPLE 작업지시서

FABRIC	겉감		안감	부자재
	SWATCH 1	SWATCH 2	SWATCH 1	SWATCH 1

의뢰자	고수정	Tel.	010-9722-2934	의뢰일자	2023-03-03
부 서				납기일자	
작 업 처	JY&Lvina			SIZE	LADIES S SIZE
Brand	Fineday				
Description	Tie back bikini top			COLOR	Black
STYLE#	FDST001				
샘플수량	1			원단	Kira REC
PTTN 단가				부자재	Cloud REC
단 가				총 금액	
GUIDE 단가				패턴의뢰번호	
구 분	SAMPLE			샘플의뢰번호	
용 도	SWIMWEAR			ITEM	

(세부내역)

FRONT

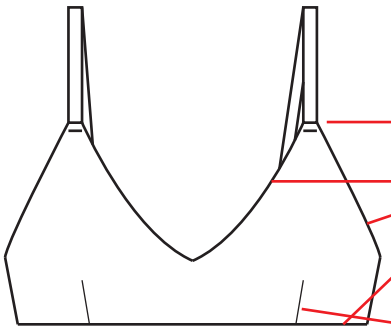

width: 3/8" / length 18"
self-fabric shoulder strap
Insert 8mm e-band

Insert 8mm eband @neckline,
Armhole & Hem
Clean finish with lining

sew dart w/ single st.

Front Inside

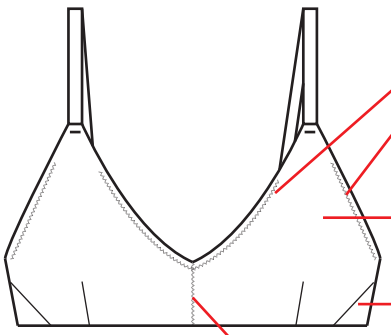

Inside 1/8" zigzag st.
@ Neckline & armhole

2Layer bust lining
insert bra bad

1/2" turnback
Brapad opening

@CF 1/8" zigzag st.

BACK

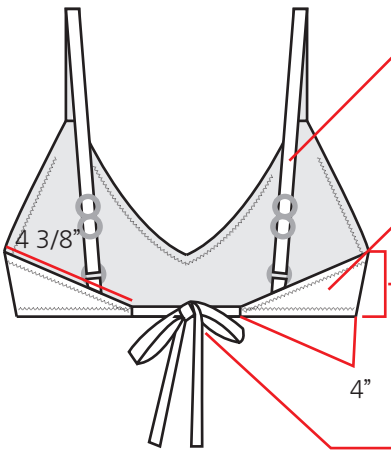

attach 10mm strap slider & O ring

Insert 8mm eband @seam
turnback 1/8" zigzag st. w/ lining

Insert 8mm boning wire @Sideseam
Cover boning w/ lining fabric

15" self strap, Insert 8mm eband

Top Length - HPS to edge	7 1/2"
Chest @armpit / half	13"
Hem / half	11 1/2"
Front Armhole	5 3/4"
Neck width	8"
Front Neck along	12 1/8"
bust dart distance @hem	5"
Bust dart length	2 1/2"
Shoulder Strap width	3/8"
Shoulder Strap length(adjustable)	18"
Back Strap width	3/8"
Back Strap length	15"